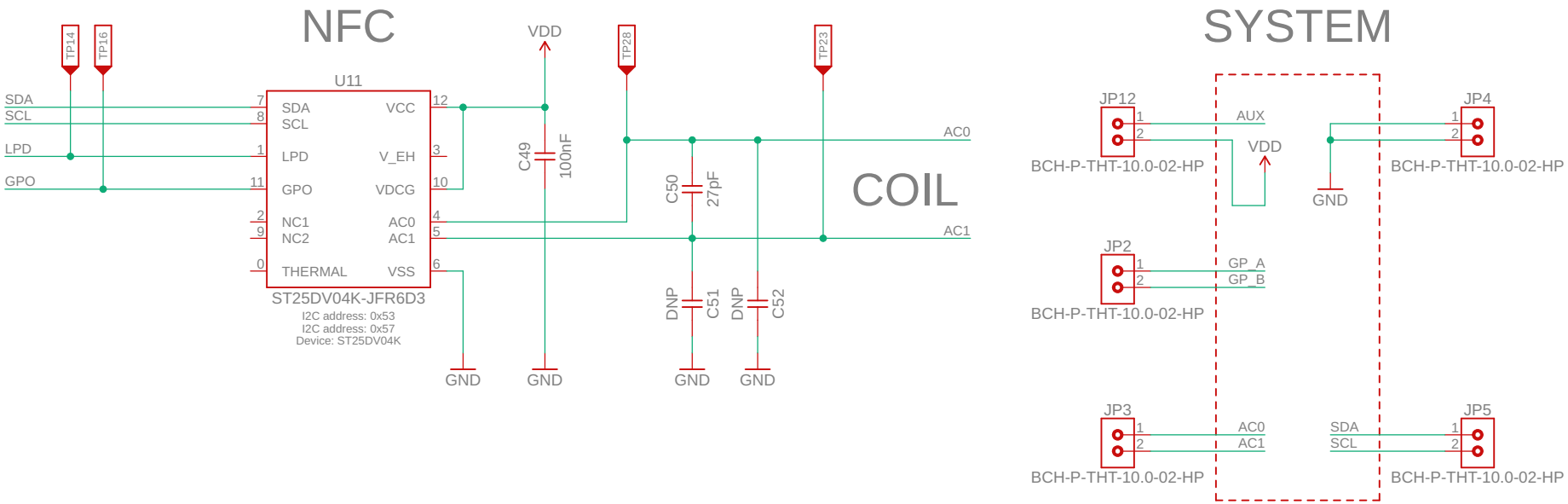

HARDWARIO AGILE HARDWARE DEVELOPMENT WWW.HARDWARIO.COM	STICKER	
	REVISION: 2.1	
	MODIFIED: 02.01.2025 9:05	4/5